型号	ATQ-2402

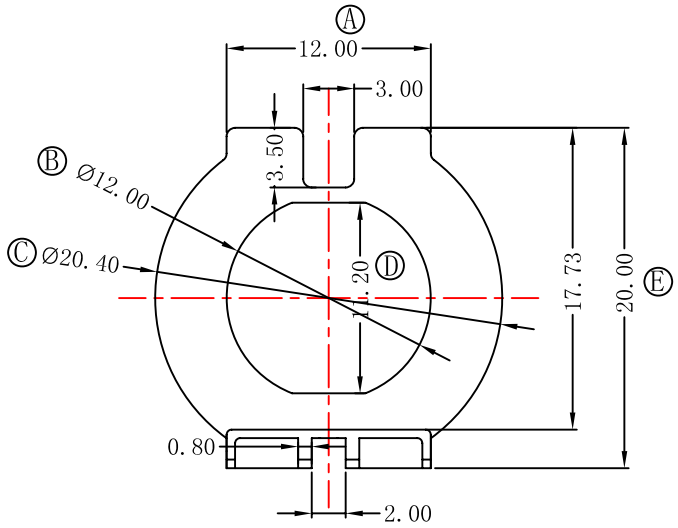

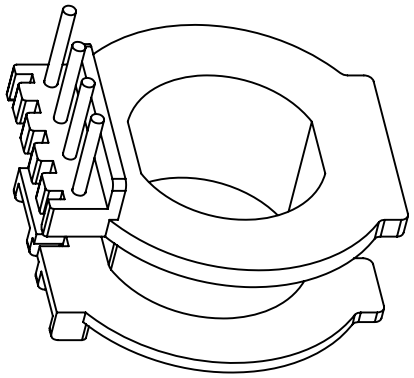

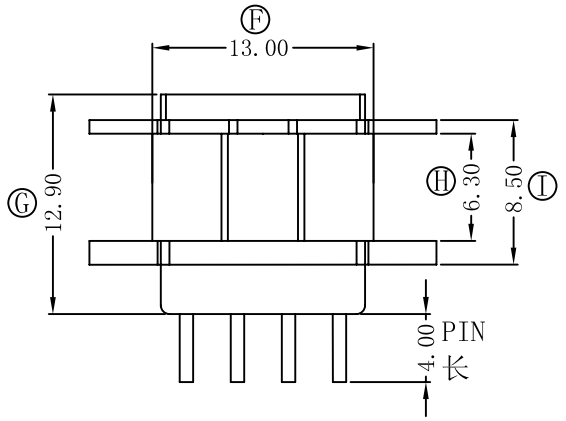

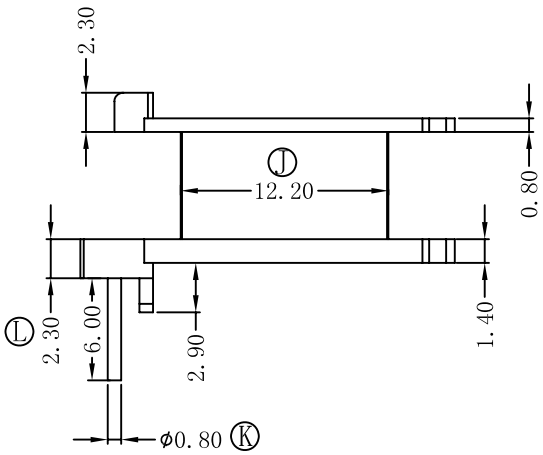

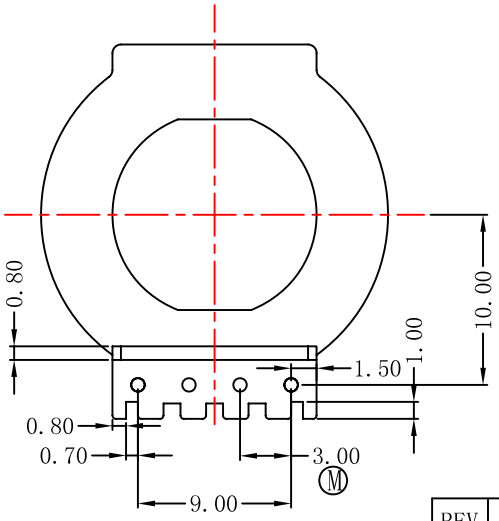

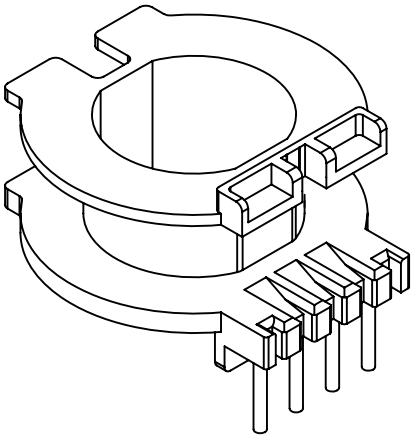

REV	DATE	REVSIONS REC

深圳市捷达成电子有限公司 SHENZHEN JIE DA CHENG ELECTRONICS CO.,LTD. TEL:0755-27317730 FAX:0755-27317731			ANGLE: +/-1°	MODEL NAME: ATQ-2402 4PIN		
			UNIT: MM	UL REC: UL 94V-0	BOBBIN MATERIAL: PHENOLIC	
DRAFTER	L.R.J	TOLERANCE 0<L<4 ±0.1 4<L<16 ±0.2 16<L<50 ±0.3 PIN PITCH ±0.2	SCALE: 4/1	PIN TENSION LOAD: 1.0KG MIN	PIN MATERIAL: CP WIRE	
CHECKER	Y.F.			DATE: 2016-03-31	DRAWING NO: ATQ-2402	REV: 1.1