型号	EE-1657

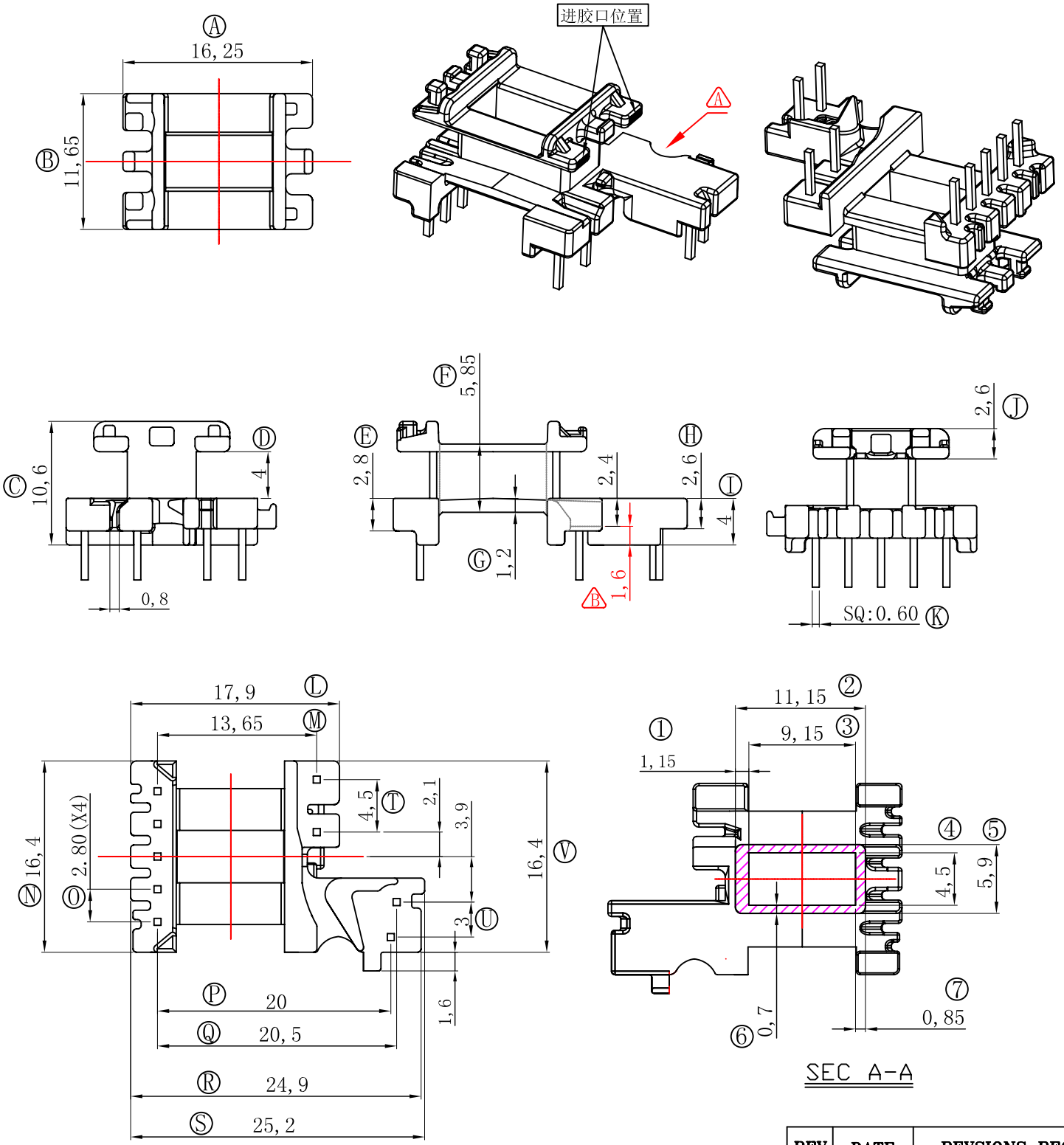

REV	DATE	REVSIONS REC
1	17-8-23	右上图中Ⓐ处过线槽改小
2	17-8-23	右上图中 Ⓐ 处大过线槽
		深度由1.7改为1.6

深圳市捷达成电子有限公司 SHANZHEN JIE DA CHENG ELECTRONICS CO.,LTD. TEL:0755-27317730 FAX:0755-27317731			ANGLE: +/-1°	MODEL NAME: EE-1657 5+2+2PIN		
			UNIT: MM	UL REC: UL 94V-0	BOBBIN MATERIAL: PM-9820	
DRAFTER	L.R.J	TOLERANCE 0<L<4 ±0.1 4<L<16 ±0.2 16<L<50 ±0.3 PIN PITCH ±0.2	SCALE: 4/1	PIN TENSION LOAD: 2.0KG MIN	PIN MATERIAL: CP WIRE	
CHECKER	Y.F.			DATE: 2017-08-23	DRAWING NO: EE-16	REV: 1.0