型号	PQ-2223-2

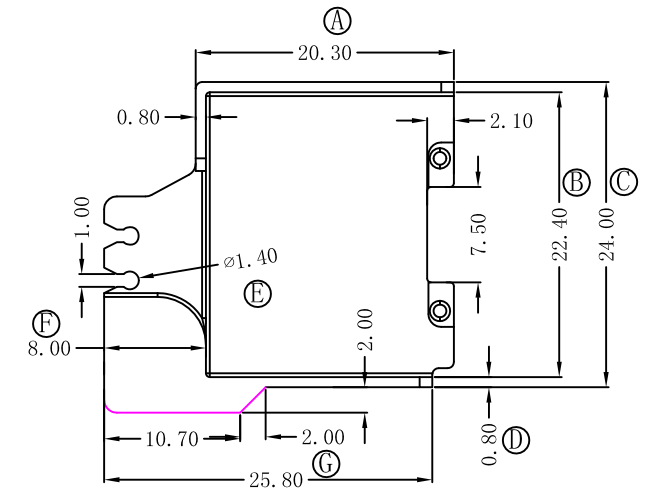

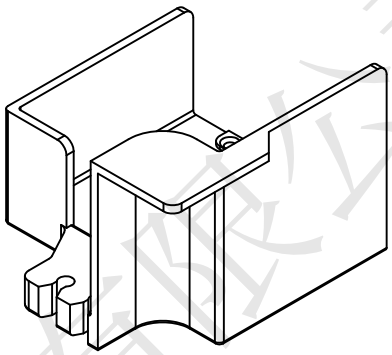

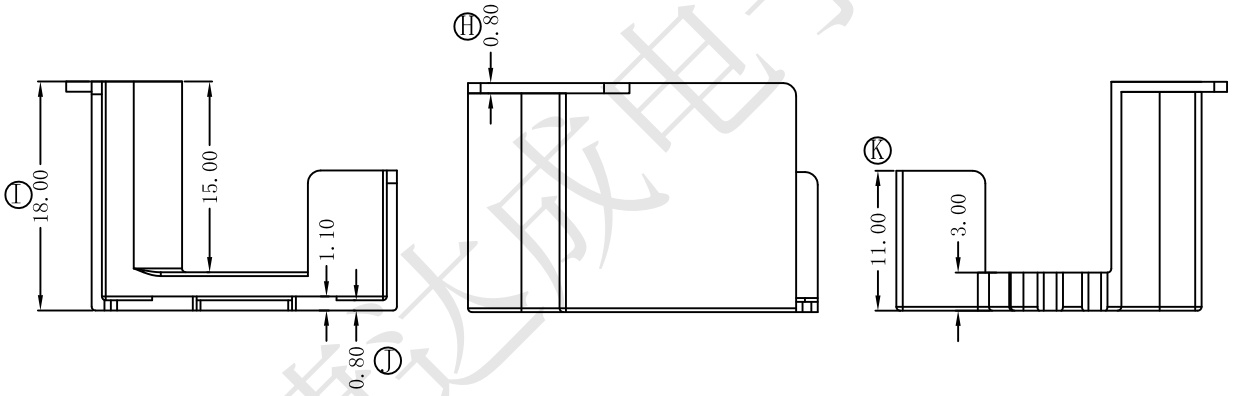

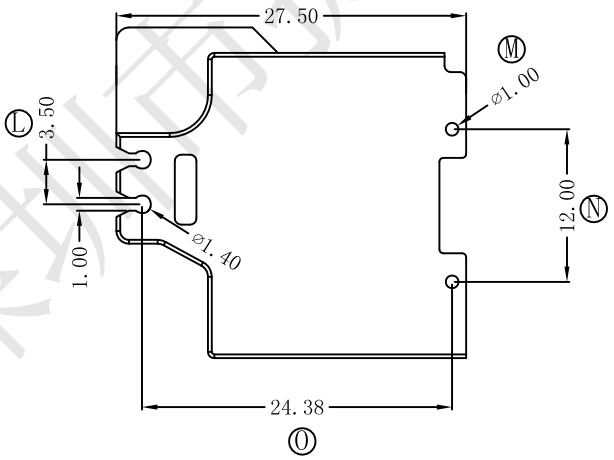

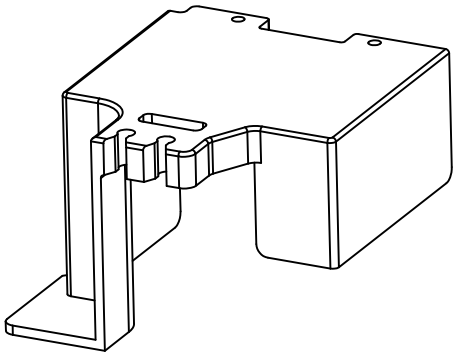

REV	DATE	REVSIONS REC

深圳市捷达成电子有限公司 SHENZHEN JIE DA CHENG ELECTRONICS CO.,LTD. TEL:0755-27317730 FAX:0755-27317731			ANGLE: +/-1°	MODEL NAME: PQ-2223-2 COVER		
			UNIT: MM	UL REC: UL 94V-0	BOBBIN MATERIAL: PBT 5630F	
DRAFTER	L.R.J	TOLERANCE	SCALE: 4/1	PIN TENSION LOAD:	PIN MATERIAL:	
CHECKER	Y.F.	0<L<4 ±0.1 4<L<16 ±0.2 16<L<50 ±0.3 PIN PITCH ±0.2		DATE: 2023-02-01	DRAWING NO: PQ-2223-2	REV: 1.0

深圳市捷达成电子有限公司